EXPERIMENT No 14:

Obstacle Avoidance Robot Using 4WD Motor Shield (L293D)

Student Guide

Prepared by BLIS GLOBAL Robotics Department

Copyright @2024

Overview

In this robot car, the task is to detect obstacles in front and avoid them. This process occurs continuously. Ultrasonic sensor (HC-SR04) is used to detect the obstacle in front. If the robot car encounters an obstacle while moving forward, it stops and uses the ultrasonic sensor attached to the servo motor to monitor both sides. It then proceeds along the path with fewer obstacles. The specialty here lies in the use of an L293D Motor Shield, making it very easy to build and wire.

Objectives

In this project, you will create a 4WD robot that:

- Moves forward.
- Detects obstacles using an ultrasonic sensor.
- Changes its direction to avoid the obstacle.

Components Needed

Before we begin, make sure you have gathered all the necessary components.

1. Arduino Uno
2. 4-wheel chassis kit with DC motors
3. L293D motor Shield module
4. Ultrasonic sensor (HC-SR04)
5. SG90 servo motor
6. Jumper wires
7. Two 18650 Rechargeable Battery 3.7V
8. 18650 Li-ion Battery Holder 2-Way
9. Toggle Switch

10. USB cable for programming the Arduino
11. Screwdriver and assorted screws
12. Glue Gun

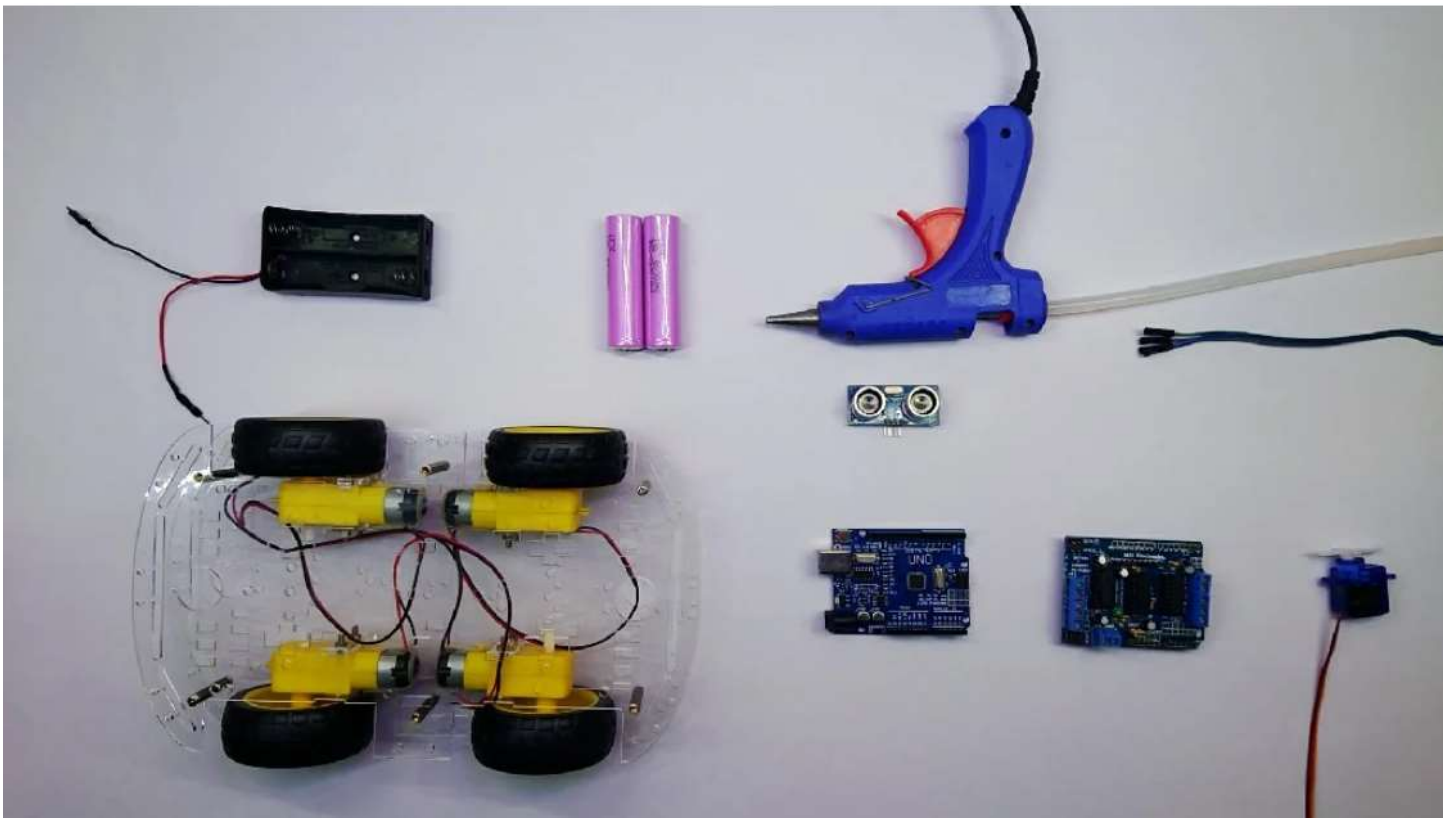

Schematic Diagram

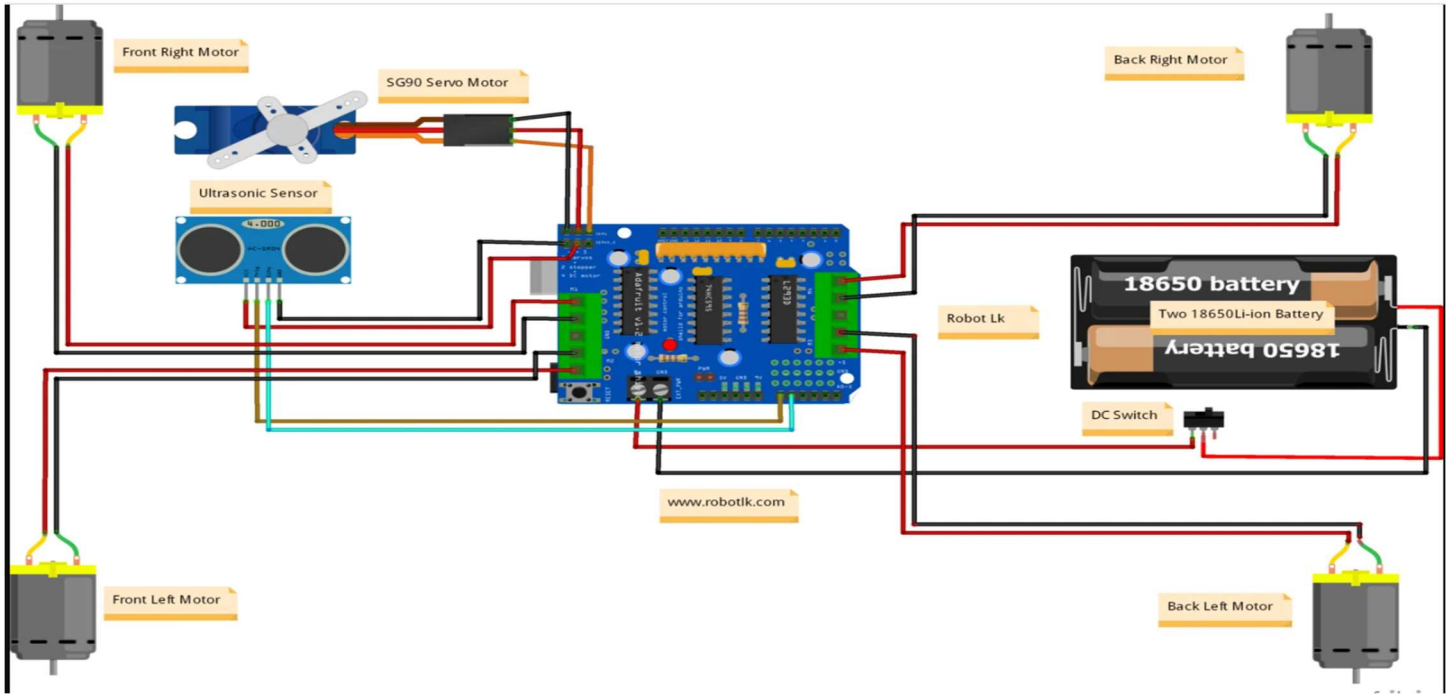

Steps to Build the Robot:

1. Assembling the Robot Chassis:

- Attach the 4 DC motors to the wheels and secure them to the 4WD chassis.
- Ensure the motors are correctly connected and aligned for smooth movement.

2. Connecting the Components:

- **L293D Motor Shield**: Stack the motor shield on top of the Arduino Uno board.
- **DC Motors**: Connect the four DC motors to the motor shield's M1, M2, M3, and M4 outputs.
    - **M1 and M2** for the left-side motors.
    - **M3 and M4** for the right-side motors.
- **Ultrasonic Sensor (HC-SR04)**:

- **VCC** to 5V pin on the Arduino.
- **GND** to GND pin on the Arduino.
- **Trig Pin** to Arduino pin D9.
- **Echo Pin** to Arduino pin D8.

- **Power Supply**: Use a battery pack to power the motors through the L293D motor shield.

3. Circuit Diagram:

Ensure the connections are made correctly:

- **Motor shield** → Arduino Uno.
- **Ultrasonic sensor** → Arduino (D9 and D8 for Trigger and Echo).
- **Motors** → Motor shield (M1, M2, M3, M4 outputs).

4. Programming the Arduino:

- Open the **Arduino IDE** and write a program that allows the robot to move forward and avoid obstacles when detected by the ultrasonic sensor.

Basic Arduino Code:

```
#include <AFMotor.h>  // Include motor shield library
// Motor setup
AF_DCMotor motor1(1);  // Left motor 1 (M1)
AF_DCMotor motor2(2);  // Left motor 2 (M2)
AF_DCMotor motor3(3);  // Right motor 1 (M3)
AF_DCMotor motor4(4);  // Right motor 2 (M4)
// Ultrasonic sensor pins
```

```
const int trigPin = 9;
const int echoPin = 8;
// Variables for distance measurement
long duration;
int distance;
// Function to measure distance using ultrasonic sensor
int getDistance() {
  digitalWrite(trigPin, LOW);
  delayMicroseconds(2);
  digitalWrite(trigPin, HIGH);
  delayMicroseconds(10);
  digitalWrite(trigPin, LOW);
  duration = pulseIn(echoPin, HIGH);
  distance = duration * 0.034 / 2;  // Calculate distance in cm
  return distance;
}

void setup() {
  // Initialize motors
  motor1.setSpeed(150);  // Set speed (0 to 255)
  motor2.setSpeed(150);
  motor3.setSpeed(150);
  motor4.setSpeed(150);
  // Set ultrasonic sensor pins
  pinMode(trigPin, OUTPUT);
```

```
  pinMode(echoPin, INPUT);
    Serial.begin(9600);  // Start serial communication for debugging
}
void loop() {
  distance = getDistance();
  Serial.print("Distance: ");
  Serial.println(distance);
  if (distance > 20) {
    // Move forward if no obstacle is detected
    motor1.run(FORWARD);
    motor2.run(FORWARD);
    motor3.run(FORWARD);
    motor4.run(FORWARD);
  } else {
    // Stop and change direction if an obstacle is detected
    motor1.run(BACKWARD);
    motor2.run(BACKWARD);
    motor3.run(BACKWARD);
    motor4.run(BACKWARD);
    delay(500);  // Move backward for half a second
    // Turn the robot (turn left in this case)
    motor1.run(FORWARD);
    motor2.run(FORWARD);
    motor3.run(BACKWARD);
    motor4.run(BACKWARD);
```

```
    delay(500);  // Turn for half a second
  }
  delay(100);  // Small delay between checks
}
```

How the Code Works:

- **Motor Setup**: The AFMotor library is used to control the motors connected to the L293D motor shield.
- **Ultrasonic Sensor**: The ultrasonic sensor measures the distance between the robot and any obstacles.
- **Obstacle Detection**: If the measured distance is greater than 20 cm, the robot moves forward. If the distance is less, the robot stops, reverses, and turns to avoid the obstacle.

Testing the Robot:

1. **Initial Test**: Place the robot on the floor with no obstacles and observe if it moves forward.
2. **Obstacle Detection**: Place an object (e.g., a box) in front of the robot and check if it changes direction when it gets close.

Optional Enhancements:

- **Add an LCD Display**: Display the distance to the nearest obstacle in real-time.
- **Fine-tune Movement**: Adjust motor speeds and turning angles for smoother movement.
- **Multiple Sensors**: Add more ultrasonic sensors for better obstacle detection coverage.

Reflection Questions:

1. What would happen if the ultrasonic sensor gives incorrect readings?

2. How can you improve the robot's ability to detect smaller or faster-moving obstacles?
3. How could you modify the code to create a more efficient turning mechanism?

Project Outcome:

By completing this project, you will have built an autonomous 4WD robot capable of avoiding obstacles in its path. This robot serves as an introduction to robotics, sensors, and motor control, with opportunities to expand into more advanced functionality.

This handout provides a hands-on project to build an obstacle avoidance robot, offering a fun and practical application of robotics and automation principles. Keep experimenting with different modifications and improvements!